MOWSIL
Durable connectivity

USB-C TO DUAL C ADAPTER

Product selling point：

1. The metal shell is sturdy and durable, and the metal texture enhances the quality.
2. High-definition video transmission, supporting up to 4K@60Hz, 1080@120Hz.
3. Supports charging while connecting to upstream devices.
4. Supports VR all-in-one machine, AR glasses, USB-C monitor, USB-C headset

Product description:

This is a USB-C to USB-C (4K@60Hz+480Mbps) + USB-C (PD100W) adapter.

Specification：

General	Product Dimensions	L45×W42×H11(mm)
	Product Weights	----g
	Packaging Dimensions	----
	Packaging Weights	----g
	Operating Environment	Temperature: 0 to 40°C Humidity: 20 to 85% (no condensation)
	Storage Environment	Temperature: -20 to +45°C Humidity: 10 to 90% (no condensation)
	ESD Protection	Contact discharge: ±4kV Air discharge: ±8kV
	Enclosure	Aluminum alloy, ABS+PC, gray
	Supported OS	Windows 7/8/10/11， Mac OS 10.12 or higher iPad OS 13 or higher， Android 8.0 or higher， Chrome OS ， Google
	Standby consumption	<2W
	Warranty	12 Months
Interface	Upstream port	USB-C USB3.2 Gen2 10Gbps
	Cable	USB-C To Open cable: Black TPE cover, length 200mm
	Video output	1*USB-C:Support USB3.2&DP Alt mode,single output max 3840x2160@60Hz,Support 480Mbps
	Charging for Laptop	1*USB-C PD3.0 Max 100W,Pre-cut 5W -IN voltage: 5-20V， 0-5A

Production Detail：

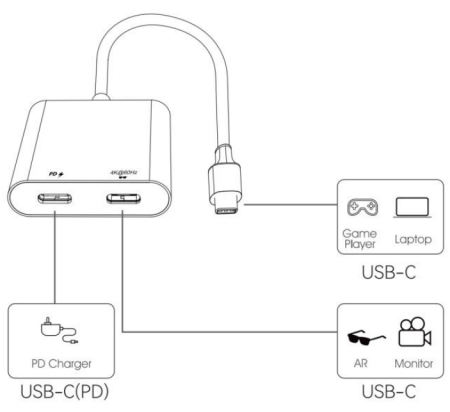

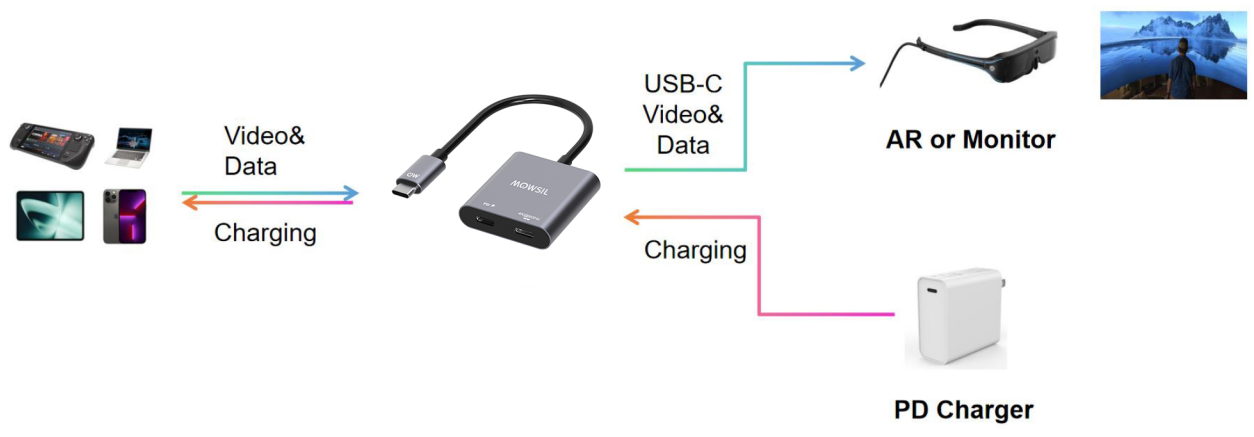

Video Resolution:

Resolution Video	Video1：USB-C
Single	3840 x 2160@60Hz

Note: Make sure your USB Type-C port supports **DisplayPort Alt Mode** for videos to work on HDMI port of Audio Dock .

Safety：

- Please disconnect the power before cleaning. Use a dry cloth to clean the product. Don't use liquid or foam cleaners.
- Avoid using this product in a humid environment.
- Do not use the product in an environment where the temperature exceeds 40°C.
- Install the device carefully to avoid fall off.
- If the product is not used for a long time, disconnect the power to avoid damage.
- Don't pour any liquid into the product to avoid fire or electric shock.